PRODUCT DATA SHEET: LAN-070-G6B

ARTICLE	
Description	NOVI LED Display spot 70W Grey linkable

CHARACTERISTICS	
Material	Aluminum
Colour	Grey / Silver
In the box	1x Display spot, 1x power cable

ELECTRIC DATA	
Power	70 Watt
Input voltage	AC 100-240V
Input power	DC 54V 1,3A
Adapter	Built-in IEC C14 input + IEC C13 output
Linkeble	Single or Serial connection (max 5)
Electrical safety class (I, II, III)	I

LIGHT TECHNICAL PROPERTIES	
Light source	LED
Light colour	Neutral White
Colour temperature	4000k
Luminous flux	8300 Lumen
Beam angle	90°
LED type	SMD
LED number	80
LED brand	Cree

LIGHT DIRECTION	
Rotating an tilting angle	Rotating
Tilt angle	90°
Reflector / lens	Symmetric with opal PMMA

DIMENSIONS & WEIGHT	
Total dimensions (LxWxH)	760 x 264 x 57 mm
Arm length	469 mm
Head dimensions (LxWxH)	150 x 264 x 57 mm
Base dimensions (LxWxH)	170 x 84 x 52 mm
Weight	1400 g
Box dimensions (LxWxH)	790 x 290 x 75 mm

CONNECTING OPTIONS	
Available clips	Aluvision-beMatrix, Custom, Truss Hook
Safety cable	Option available (not included)

ABSOLUTE MAXIMUM RATINGS	
Working temperature	-5°C - +40°C
Storage temperature	-5°C - +40°C
IP - Code	IP 20

ENVIRONMENTAL CHARACTERISTICS	
Energy label	A+
Energy consumption	70W

LIFESPAN	
Lamp life time	30000 hrs
Number of switching cycles	15000

PRODUCT DATA SHEET: LAN-070-G4B

SIZES

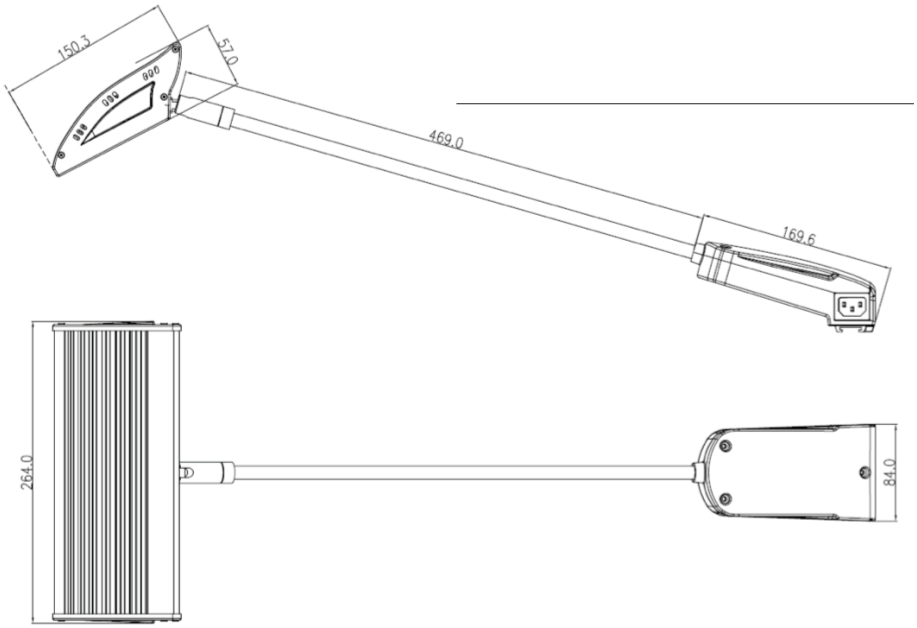

DOORKOPPELBAAR

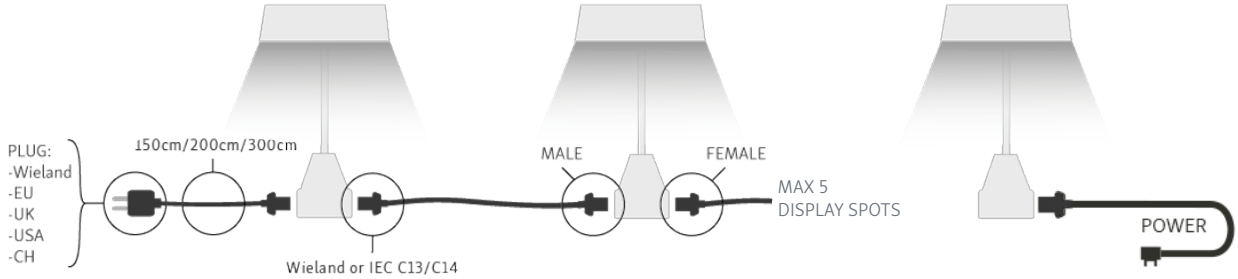

DIVERSE BEVESTIGINGSCLIPS

Clip Truss Hook 30/40cm

Clip Aluvision - beMatrix

Clip Custom 10/17cm

Exposupply B.V.
+31 (0)85 27 36 421

Eckertstraat 18
8263 CB Kampen

www.exposupply.com
info@exposupply.com