PRODUCT DATA SHEET: LAM-025-G6E

ARTICLE	
Description	META LED Armlight 25W Grey with power supply

CHARACTERISTICS	
Material	Aluminum
Colour	Grey / Silver
In the box	1x Display spot, 1x power cable

ELECTRIC DATA	
Power	25 Watt
Input voltage	AC 100-240V
Input power	DC 27-35V 0,65A
Adapter	"D" shaped connector
Electrical safety class (I, II, III)	III

LIGHT TECHNICAL PROPERTIES	
Light source	LED
Light colour	Warm White
Colour temperature	5700k
Luminous flux	2750 Lumen
Beam angle	120°
LED type	SMD
LED number	50
LED brand	Everlight

LIGHT DIRECTION	
Rotating an tilting angle	Rotating
Tilt angle	90°
Reflector / lens	Symmetric

DIMENSIONS & WEIGHT	
Total dimensions (LxWxH)	480x 234 x 27 mm
Arm length	300 mm
Head dimensions (LxWxH)	75 x 234 x 25 mm
Base dimensions (LxWxH)	102 x 37 x 38 mm
Weight	530 g
Box dimensions (LxWxH)	585 x 265 x 60 mm

CONNECTING OPTIONS	
Available clips	Aluvision, beMatrix, Octanorm, Syma, Modul, Panel, Custom, Truss, Pipe
Safety cable	Option available (not included)

ABSOLUTE MAXIMUM RATINGS	
Working temperature	-5°C - +40°C
Storage temperature	-5°C - +40°C
IP - Code	IP 20

ENVIRONMENTAL CHARACTERISTICS	
Energy label	A+
Energy consumption	25W

LIFESPAN	
Lamp life time	30000 hrs
Number of switching cycles	15000

PRODUCT DATA SHEET: LAM-025-G6E

SIZES

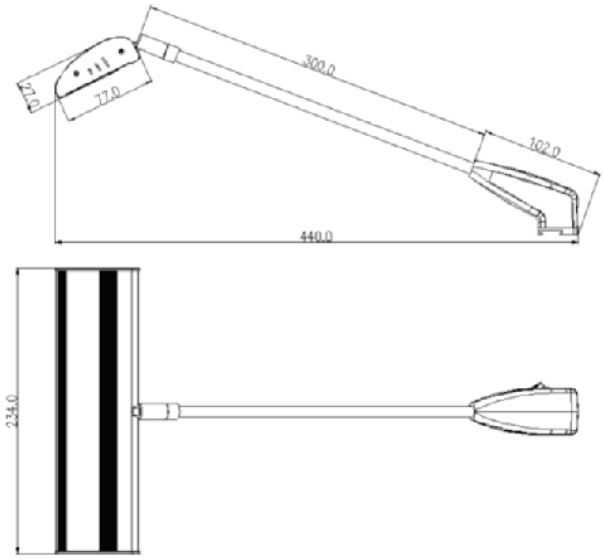

POWER

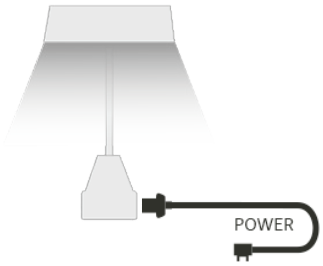

DIVERSE BEVESTIGINGSCLIPS

Clip Alusision beMatrix

Clip Custom 10/17 cm

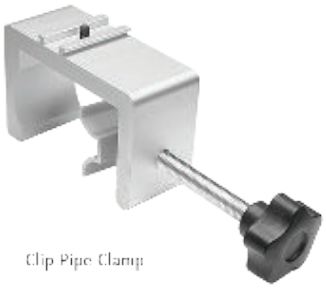

Clip Pipe Clamp

Clip Modul/Syma

Clip Octanorm 1

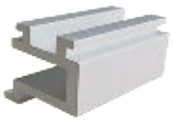

Clip Octanorm 2

Clip Panel 16/19/22 mm

Clip Angle 7,60°

Clip Truss Hook 30/40 cm

Exposupply B.V.
+31 (0)85 27 36 421

Eckertstraat 18
8263 CB Kampen

www.exposupply.com
info@exposupply.com